contributed by K. McDonald, 10/7/02, kirkmcd@princeton.edu

0.1 Liquid Argon TPC

This provides additional material of the liquid argon section.

0.1.1 Fiducial Mass

0.1.2 Readout Channel Count

0.1.3 R&D Program

0.1.4 Near Detector in the NUMI Beam

Associated with the opportunity for use of a large liquid argon TPC in the NUMI off-axis beam $\approx$ 1000 km from Fermilab is the need for a near detector to characterize the neutrino flux and to measure the low energy neutrino-argon cross section for energies up to 3-4 GeV. A near detector of fiducial mass of 1.5 tons at 1 km from the NUMI target is suitable for this, as it would detector about 10^5 charged-current ν_μ interactions per year [2].

Outside the fiducial volume for the neutrino interaction vertex, a near detector must contain electromagnetic and hadronic showers associated with the neutrino interaction. It will not be possible to range out the final-state muons in a detector of modest size, since the dE/dx loss for muons is about 200 MeV/m. Therefore it will be necessary to immerse some or all of the liquid argon TPC in a magnetic field, or to follow the liquid argon TPC with a magnetic spectrometer.

Electromagnetic showers in liquid argon, whose radiation length is 0.14 m, are well contained within a cylinder of about 0.5 m radius and 2.5 m length. Low-energy hadronic showers are well contained within a cylinder of about 0.8 m radius and 5 m length, since the hadronic interaction length is about 0.8 m. A simple geometry for a near detector would be a cylinder of 2.4 m diameter and 7 m length, as shown in Fig. 1 which is based on an earlier concept for a hadronic beam test of a liquid argon TPC [3]. The fiducial volume of this detector would be a cylinder 0.8 m in diameter and 2 m long, with volume of 1.0 m^3 and fiducial mass of 1.4 tons. The total mass of liquid argon would be 37 tons. The readout channel count would be about 8,000.

Such a detector is intermediate in scope between the ICARUS 10-ton prototype [4] (whose fiducial mass is zero for neutrino interactions) and the ICARUS T-600 modules [1]. The principal costs of a 40-ton detector would be for the cryostat, the cryogenic system, and the electronic readout, very roughly $1M each.

As noted above, it is necessary to measure the final-state muon momenta, which could be accomplished by superimposing a magnetic field over only part of the liquid argon detector. As indicated in Fig. 2, a magnetic field of 0.5 T on the downstream 3 m of the detector would provide 15% momentum resolution up to 5 GeV muon energy. This fields could be provided, for example, by reconfiguring the superconducting coils originally used on the Fermilab 15′ bubble chamber.

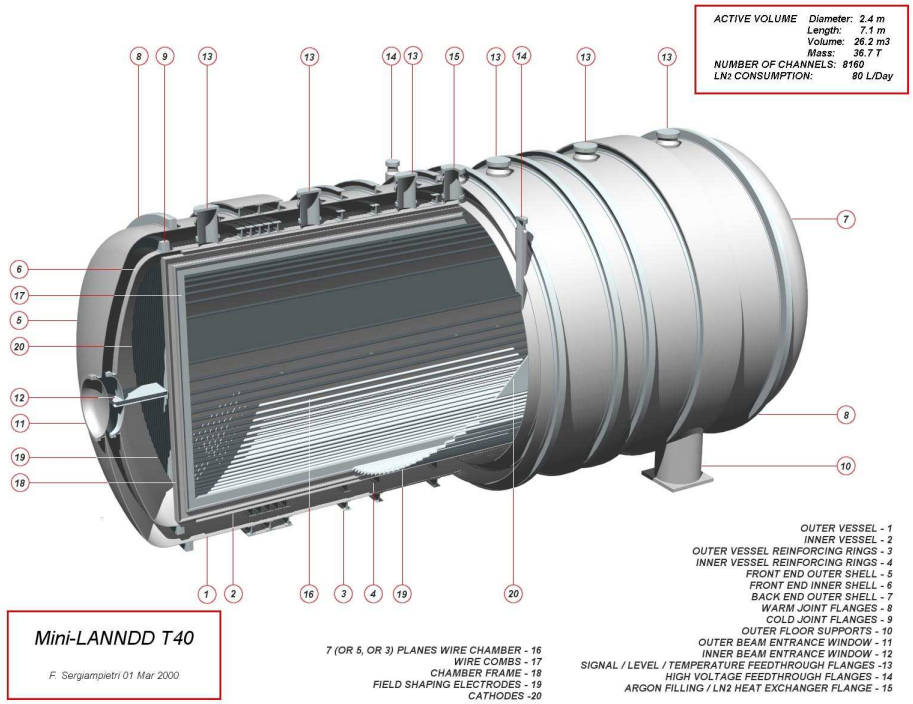

Figure 1: Concept of a 40-ton liquid argon detector for use as an off-axis near detector in the NUMI beam.

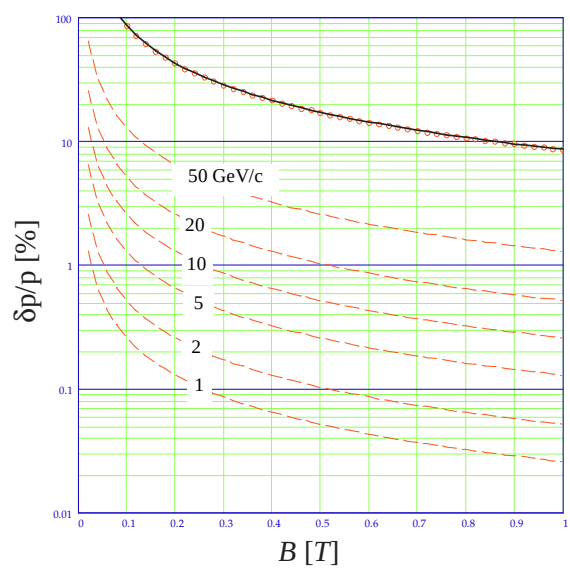

Figure 2: Momentum resolution *vs.* magnetic field for muons crossing 20 X_0 in liquid Argon. Dashed curves: contribution of the detector resolution at momenta 1, 2, 5, 10, 20 and 50 GeV/c. Circles: contribution of the multiple scattering independent of momentum. Solid thick curve: combined contribution of detector resolution and multiple scattering in the range 1-50 GeV/c.

1 References

[1] The ICARUS Collaboration, *Cloning of T600 Modules to Reach the Design Sensitive Mass*, ICARUS-TM/01-09, http://pcnometh4.cern.ch/Proposals/t2400doc_lowres.pdf

[2] A. Bodek *et al.*, *Expression of Interest in Construction of an Off-Axis Near Detector to Measure Neutrino Cross Sections on Nuclear Targets in the Few GeV Region with the NUMI Beam*, submitted to the FNAL PAC (June 4, 2002), http://www.pas.rochester.edu/~ksmcf/eoi.pdf

[3] F. Sergiampietri *et al.*, Proc. 4rth Int. Conf. on Calorimetry in High-Energy Physics (Elba, Italy, 1993), p. 357.

[4] F. Arneodo *et al.*, *Operation of a 10 m^3 ICARUS Detector Module*, Nucl. Instr. and Meth. **A461**, 286 (2000), http://www.aquila.infn.it/icarus/icarus_tm/icarus_00_06.ps